ACORN COMPUTER

Winchester Disc

110 and 130

Service Manual

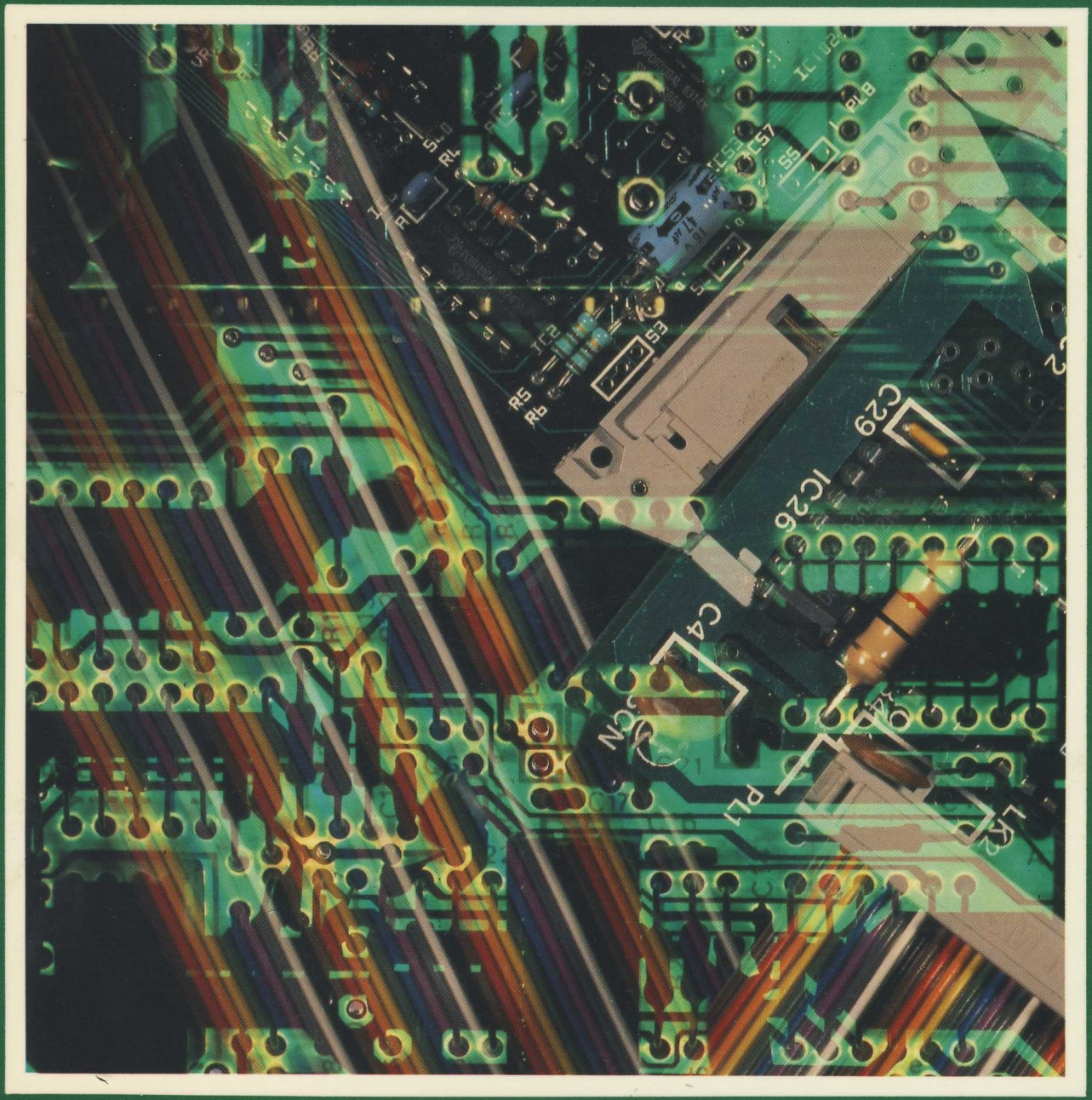

WINCHESTER DISC
110 & 130

SERVICE MANUAL

Part No 0427,001
Issue 1
August 1984

Within this publication the term 'BBC' is used as an abbreviation for ' British Broadcasting Corporation'.

Copyright Acorn Computers Limited 1984

Neither the whole or any part of the information contained in, or the product described in, this manual may be adapted or reproduced in any material form except with the prior written approval of Acorn Computers Limited (Acorn Computers).

The product described in this manual and products for use with it, are subject to continuous development and improvement. All information of a technical nature and particulars of the product and its use (including the information and particulars in this manual) are given by Acorn Computers in good faith. However, it is acknowledged that there may be errors or omissions in this manual. A list of details of any amendments or revisions to this manual can be obtained upon request from Acorn Computers Technical Enquiries. Acorn Computers welcome comments and suggestions relating to the product and this manual.

All correspondence should be addressed to:-

Technical Enquiries
Acorn Computers Limited
Newmarket Road
Cambridge
CB5 8PD

All maintenance and service on the product must be carried out by Acorn Computers' authorised dealers. Acorn Computers can accept no liability whatsoever for any loss or damage caused by service or maintenance by unauthorised personnel. This manual is intended only to assist the reader in the use of this product, and therefore Acorn Computers shall not be liable for any loss or damage whatsoever arising from the use of any information or particulars in, or any error or omission in, this manual, or any incorrect use of the product.

This manual is for the sole use of Acorn Computers' authorised dealers and must only be used by them in connection with the product described within.

ACORN and ECONET are trademarks of ACORN Computers Limited.

First published 1984
Published by Acorn Computers Limited

WINCHESTER DISC SERVICE MANUAL

Contents page

1 Introduction 1
2 Packaging and installation 2
3 Specification 3
3.1 Disc drive 3
3.2 ADAPTEC ACB-4000 Winchester disc controller 3
3.3 Host Adapter 3
3.4 Power supply 3
3.5 Environmental 4
3.6 Outside dimensions 4
3.7 Connections 4
4 Disassembly and assembly 5
5 Circuit description 8
5.1 The disc controller board 8
5.1.1 SCSI control and data lines 9
5.1.2 SCSI connector pinout (PL2 and J4) 10
5.1.3 Bus phases 10
5.1.4 The reset condition 12
5.1.5 The ST-412 disc interface connector pinouts (J2 and J0) 13
5.2 The 1MHz expansion bus 14
5.2.1 Control, address and data lines 14
5.2.2 Connector pinout 14
5.3 Winchester Disc Host Adapter 15
5.3.1 Address decoding and handshaking 15
5.3.2 Buffering 16
5.3.3 Termination 16
6 Test equipment and formatting 17
7 Fault finding 18
7.1 Power supply 18
7.2 Address decoding 19
7.2.1 &FC40 read data 19
7.2.2 &FC40 write data 19
7.2.3 &FC41 read status 20
7.2.4 &FC42 write select 20
7.2.5 &FC43 write IRQ enable 21
7.3 Handshaking 21
7.4 Bus lines 22

Appendix

Host Adapter PCB circuit diagram 25
Winchester Disc unit block diagram 27
Winchester Disc unit parts list 28
Winchester Disc unit assembly diagram 29
Winchester Disc unit wiring diagram 31
LED connection diagram 33
Winchester Disc Host Adapter parts list 34
Host Adapter PCB assembly diagram 35

WARNING: THE WINCHESTER DISC UNIT MUST BE EARTHED

IMPORTANT: The wires in the mains lead for the apparatus are coloured in accordance with the following code:

GREEN & YELLOW - EARTH
BLUE - NEUTRAL
BROWN - LIVE

As the colours of the wires may not correspond with the coloured markings identifying the terminals in your plug, proceed as follows:

The wire which is coloured green and yellow must be connected to the terminal in the plug which is marked by the letter E, or by the safety earth symbol ± , or coloured either green or green and yellow.

The wire which is coloured blue must be connected to the terminal which is marked by the letter N, or coloured black.

The wire which is coloured brown must be connected to the terminal which is marked by the letter L, or coloured red.

If the socket outlet available is not suitable for the plug supplied, the plug should be cut off and the appropriate plug fitted and wired as previously noted. The moulded plug which was cut off must be disposed of as it would be a potential shock hazard if it were to be plugged in with the cut off end of mains cord exposed.

The moulded plug must be used with the fuse and the fuse carrier firmly in place. The fuse carrier is of the same basic colour* as the coloured insert in the base of the plug. Different manufacturers' plugs and fuse carriers are not interchangeable. In the event of loss of the fuse carrier the moulded plug MUST NOT be used. Either replace the moulded plug with another conventional plug wired as previously described, or obtain a replacement fuse carrier from an Acorn Computers authorised dealer. In the event of the fuse blowing, it should be replaced, after clearing any faults, with a 5 amp fuse that is ASTA approved to BS 1362.

*Not necessarily the same shade of that colour.

1. Introduction

This manual is intended to provide the information required to diagnose and repair faults on the Winchester Disc unit which was designed by Acorn Computers Limited of Cambridge, England.

The only dealer-serviceable part of the Winchester Disc unit is the Host Adapter printed circuit board. Faults detected in the disc drive, disc controller board, or power supply mean that the faulty part must either be returned for repair or replaced. Dealers may hold stock of these items and should refer to information provided by their supplier for service procedures for these units.

The information contained in this manual is aimed at service engineers and Acorn dealers who will be servicing the Winchester Disc unit on behalf of Acorn Computers Ltd.

2. Packaging and installation

The Winchester Disc unit is supplied fitted with two expanded polyethylene end pieces in a corrugated card box. Supplied with the Winchester Disc unit is a User Guide, a ROM labelled ADFS, a mains lead, a 1MHz bus lead and a guarantee card which are all packed in a card tray located in the top of the box.

The ADFS ROM must be plugged into one of the host microcomputer's sideways ROM sockets, or the Winchester filing system will not work.

The Winchester Disc unit must be connected to a 240V AC 50Hz supply via the mains lead provided and the socket at the rear of the unit.

A mains power switch is located at the rear of the unit.

A 3.15A type F fuse is located in a holder beneath the mains socket at the rear of the unit.

The Winchester Disc unit must be connected to the host microcomputer's 1MHz expansion bus socket using the ribbon cable provided.

There is a green activity lamp on the front panel which illuminates when the drive is being accessed.

The Winchester unit is fragile, and must not be subjected to any shock. Do not use the unit in conditions of extreme heat, cold, humidity or dust or in places subject to vibration. Do not block ventilation in front of or behind the unit, especially the fan intake at the rear. Ensure that no foreign objects are inserted through any openings in the case. Do not move the unit while it is operating.

The unit must be transported in its original packing, which must be retained for future use.

3. Specification

The Winchester Disc unit provides storage and retrieval of data and programs on non-removable magnetic discs. This can be local storage for a microcomputer such as the BBC Microcomputer model B or as a fileserver for an ACORN ECONET local area network.

The Winchester Disc unit consists of a 10 Mbyte (model 110) or 30 Mbyte (model 130) hard disc drive, an ADAPTEC ACB-4000 Winchester Disc Controller, an Acorn Host Adapter Board which is an interface between the ACB-4000 and the host computer's 1 MHz expansion bus, and a power supply unit. The unit also contains a 240V AC fan for cooling.

3.1 Disc drive

Capacity	10M (model 110) or 30M (model 130) formatted
Format	ADAPTEC 33 sectors of 256 bytes
Cylinders	306 (10M version)
Heads	4 (10M version)
Disc rpm	3600

3.2 ADAPTEC ACB-4000 Winchester disc controller

Disc interface ST-412
Host interface SCSI

3.3 Host Adapter

SCSI to 1 MHz expansion bus

3.4 Power supply

Minimum input voltage 198V AC
Maximum input voltage 264V AC
Supply frequency 47 to 53Hz
+5V output voltage 4.9 to 5.2V
+5V output current 0.7 to 3.5A
+5V overvoltage protection 5.8 to 7.0V
+5V overcurrent protection 5.0A
+12V output voltage 11.4 to 12.6V
+12V output current 0.6 to 3.0A
+12V surge output current 5A for 15 seconds
+12V overvoltage protection 13.0 to 16.0V
+12V overcurrent protection 6.0A

3.5 Environmental

Minimum operating temperature	0 degrees C
Maximum operating temperature	+37 degrees C
Minimum storage temperature	-30 degrees C
Maximum storage temperature	+60 degrees C
Maximum operating humidity	80% RH at 35 degrees C
Maximum storage humidity	80% RH at 55 degrees C
Operating altitude	0 to 1800 metres above sea level
Storage altitude	0 to 3500 metres above sea level
Thermal gradient	10 degrees C per hour
Operation lifetime	50,000 hours
Mean time before failure	10,000 hours of typical usage

3.6 Outside dimensions

height 100mm (108mm including feet)
width 335mm
depth 365mm

3.7 Connections

Two 37 way D-type socket connectors are provided for 1MHz bus daisy chain connection. These are on the rear panel and are labelled '1MHz bus IN' and ' OUT', although they are in fact identical. Three removable resistor packs are mounted on the Host Adapter PCB inside the case for 1MHz bus termination. These packs are fitted as standard, but need be retained only in the last unit in the daisy chain.

Also on the rear panel is an IEC plug for mains power input.

4. Disassembly and assembly

Warning: when the Winchester Disc unit is moved or worked upon, great care must be taken not to drop, jar or shock the unit in any way. If the hard disc is broken through careless handling then the unit is unserviceable.

i) Ensure that the unit is disconnected from the mains power supply before dismantling it.

ii) To service the Host Adapter PCB, remove the three small phillips screws labelled A in figure 1, underneath the front of the unit which hold on the front panel.

(The unit may be turned on its back to do this if desired, but then remember that references to left and right in the following description will be reversed.)

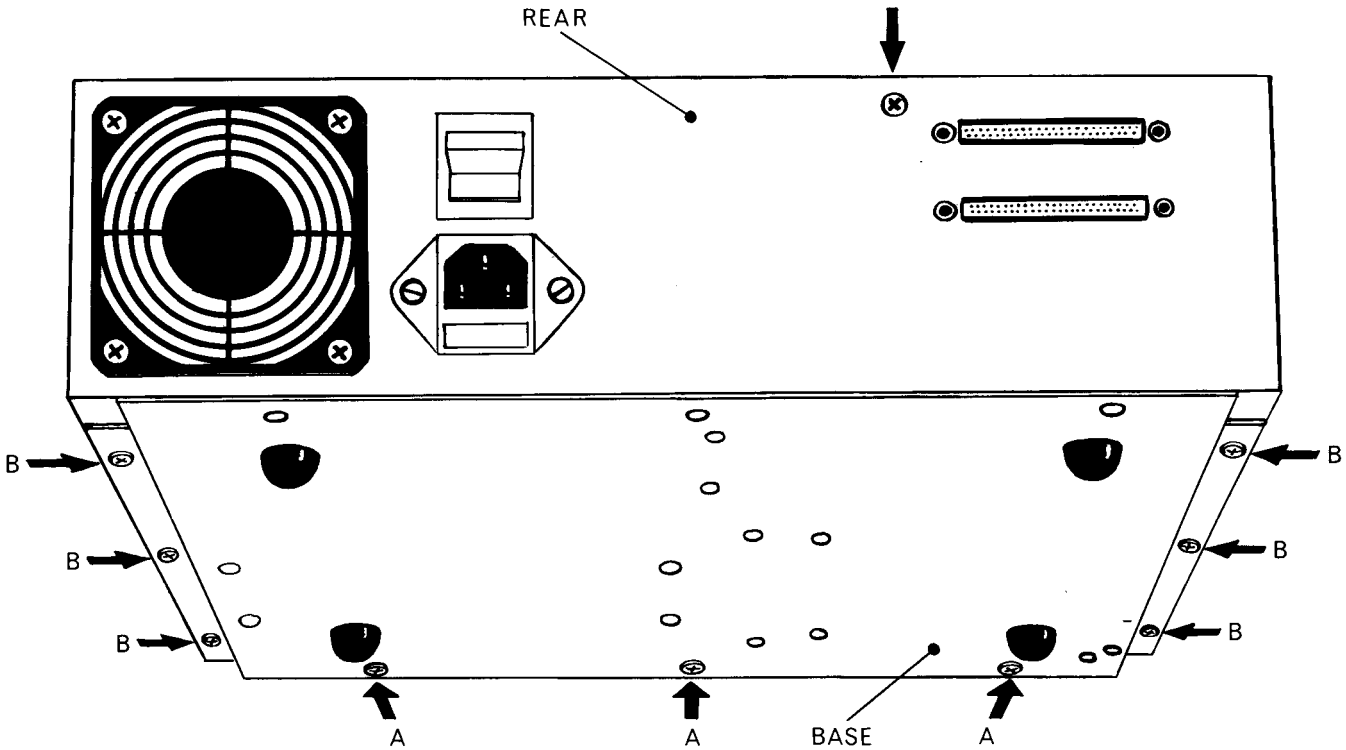

Figure 1 Screws to remove

iii) Insert a hook through the grill on the front panel to the left side and pull the front panel until the the connection to the light emitting diode (LED) is visible. Pull the connector off the light emitting diode and make a note of which way round it was fitted. Remove the front panel completely.

iv) Undo the six small phillips screws labelled B in figure 1, which connect the bottom panel to the top panel.

(If the unit was turned on its back to gain access to the screws on the bottom panel, now turn it back the right way up.)

v) Remove the single small phillips screw labelled C in figure 1, from the rear panel (middle top near the ribbon cable).

vi) Slide the top cover forward and off, being careful not to get any of the cables or components caught in it. (The lug which was located by the screw in the rear panel will usually become caught in the internal cabling during this process.)

vii) The back panel can be left in place.

viii) Two PCBs are now visible to the front left of the unit, one above the other, see figure 2.

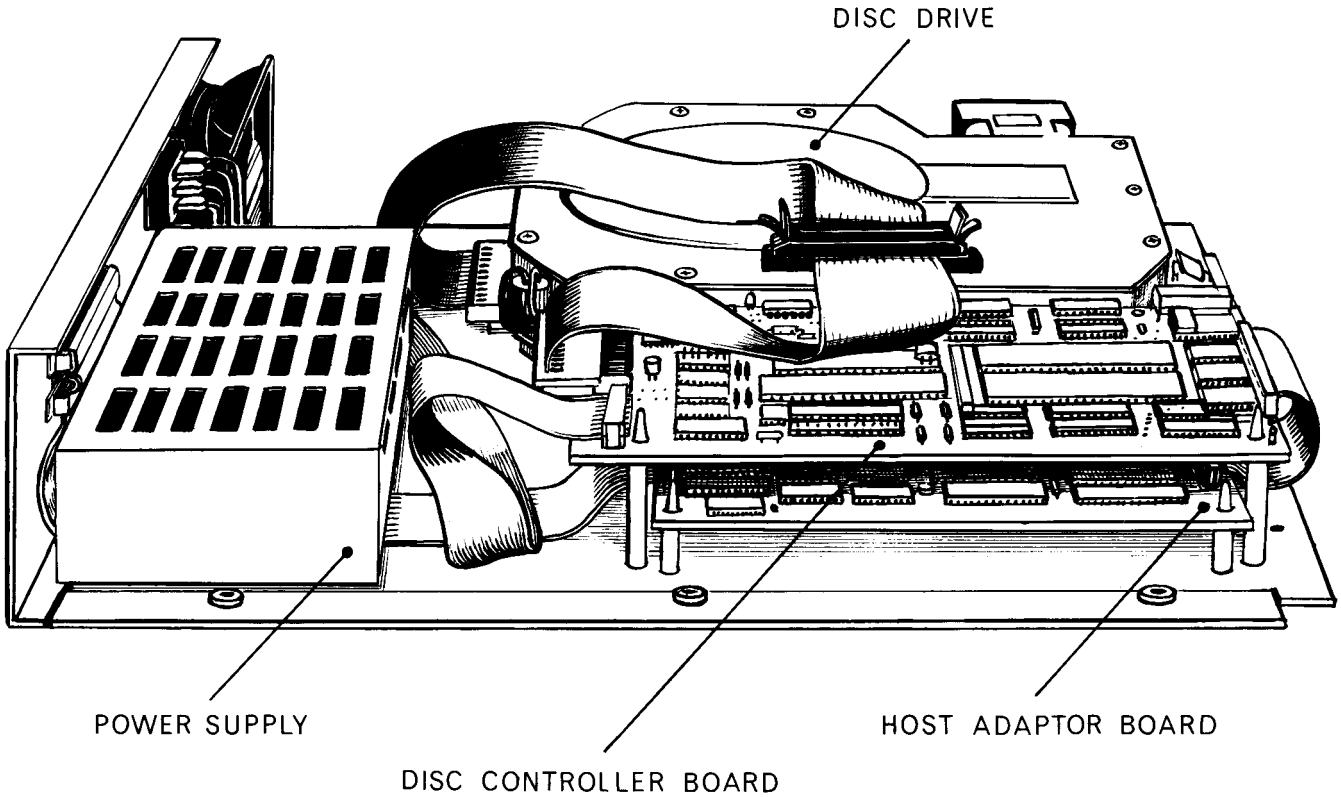

Figure 2 View from left side

If it is necessary to test the Host Adapter (the lower PCB) with the system running then the top board can be removed with all its cable connections in place. Alternatively, the connectors can be unplugged to ease removal of the board and then reconnected again afterwards.

Remove the top board by undoing the four phillips screws which hold the PCB on its four plastic pillars. The Host Adapter PCB is the lower board and may be worked upon without removal. If it is necessary to replace the Host Adapter PCB then it can be removed in the same way as the top board.

ix) No further disassembly must be carried out. The cover of the hard disc drive unit must NOT be removed.

Reverse the above procedure to reassemble the unit. Do not forget to reconnect the LED cable at iii) before relocating the front panel.

Note: the LED connector must be connected the correct way round or the LED will not function.

5. Circuit description

The only part of the Winchester Disc unit which is serviceable by Acorn dealers is the Host Adapter PCB (see appendix for circuit diagram) and its connectors and cables etc. This is an interface between the asynchronous SCSI interface to the disc controller board, and the synchronous 1MHz expansion bus interface on the host microcomputer used by the Winchester Disc filing system. The following circuit description will provide enough information about the disc controller board and the 1MHz expansion bus to allow a full understanding of the operation of the Host Adapter board. For the full specification of the SCSI interface see the relevant literature.

5.1 The disc controller board

The disc controller used in the Winchester Disc unit is a device which will send or accept parallel (byte) data to or from the host microcomputer (via 1MHz bus and Host Adapter), and will read or write this data serially to or from the hard disc. It contains a 256 byte cache memory (hereafter referred to as the "sector memory" because 1 disc sector = 256 bytes). A connection diagram for the disc controller board is given in figure 3 below.

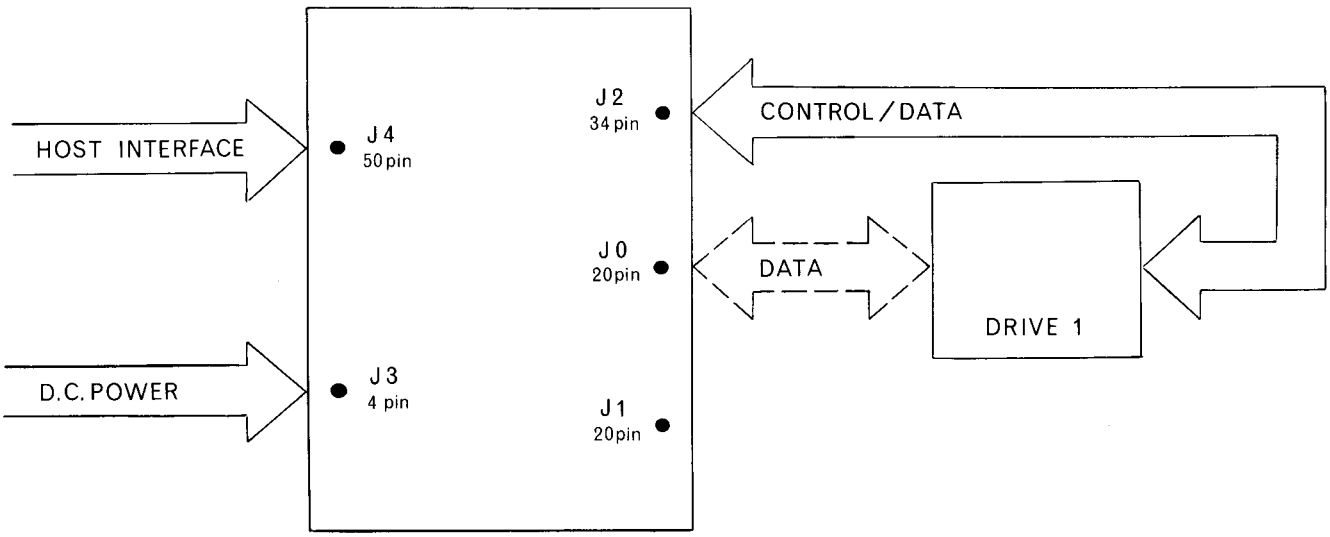

Figure 3 Disc controller board connection diagram

In the following description, the Host Adapter is known as the "initiator", and the disc controller is known as the "target".

5.1.1 SCSI control and data lines

The 8 control and 8 data lines on the SCSI side of the controller (shown on the right side of the Host Adapter circuit diagram in the appendix) are all active-low open collector, and are as follows:

SELECT (SEL, pin 44) is an open collector signal which is asserted by the initiator as the first step in any transfer of data through the interface.

BUSY (BSY, pin 36) is an open collector signal which is asserted by the target to indicate that the data bus is in use. This is the first response of the target to the initiator's assertion of SEL, and the SEL/BSY handshake is the first communication in any Winchester filing system operation.

CONTROL/DATA (C/D, pin 46) is asserted by the target when the bus carries control information, and is deasserted when the bus carries data.

INPUT/OUTPUT (I/O, pin 50) controls the direction of data flow, and is asserted by the target to indicate input to the initiator (disc to computer), and is deasserted to indicate output to the target (computer to disc).

REQUEST (REQ, pin 48) is asserted by the target to indicate a request for a REQ/ACK data transfer handshake.

ACKNOWLEDGE (ACK, pin 38) is asserted by the initiator to indicate acknowledgement of a REQ/ACK data transfer handshake. The REQ/ACK handshake provides the asynchronous timing of all data transfer between initiator and target.

RESET (RST, pin 40) is asserted by the initiator on power-up and when the host microcomputer's BREAK key is pressed. It causes the "reset condition" (see 5. 1.3) which immediately clears the bus and resets the system.

MESSAGE (MSG, pin 42) is asserted by the target when it issues a message byte to notify completion of a command, see 5.1.2.

DATA BUS (DB0 to DB7, pins 2 4 6 8 10 12 14 and 16) is a parallel data bus consisting of 8 signals from DBO (least significant) to DB7 (most significant) . 1 byte of information is transferred across the bus with each REQ/ACK handshake. It is important to remember that the data lines are active-low and therefore are inverted in both directions when communicating with the host microcomputer.

All odd numbered pins are OV, and pin 34 is +5V.

5.1.2 SCSI connector pinout (PL2 and J4)

	Pin	no	
0V	1	2	DB0
0V	3	4	DB1
0V	5	6	DB2
0V	7	8	DB3
0V	9	10	DB4
0V	11	12	DB5
0V	13	14	DB6
0V	15	16	DB7
0V	17	18	}
0V	19	20	}
0V	21	22	}
0V	23	24	} For future expansion
0V	25	26	}
0V	27	28	}
0V	29	30	}
0V	31	32	}
0V	33	34	+5V to supply test equipment
0V	35	36	BSY
0V	37	38	ACK
0V	39	40	RST
0V	41	42	MSG
0V	43	44	SEL
0V	45	46	C/D
0V	47	48	REQ
0V	49	50	I/O

5.1.3 Bus phases

The bus has several distinct operational phases and cannot be in more than one of these phases at any given time.

Bus phases occur in a prescribed sequence. The reset condition can interrupt any phase and is always followed by bus free. Any other phase can also be followed by the bus free phase.

The prescribed sequence is from bus free to selection to one or more of the information transfer phases to bus free again.

There are no restrictions on the order of information transfer phases, and a phase will often follow itself, eg two data phases one after the other.

A typical sequence would be:

bus free
select controller - selection phase
transfer command bytes - command phase
transfer data bytes (if necessary) - data in/out phase
status phase
message phase

The phases are as follows:

Bus free phase: indicates that the bus is available for use. The bus free phase is indicated by all control signals described in section 5.1.1 being deasserted. If SEL and BSY and RST are not asserted, that is sufficient to guarantee bus free.

Selection phase: allows the initiator to select the target. After detecting bus free, the initiator asserts SEL. The target detects SEL asserted, and BSY and I/O deasserted, and responds by asserting BSY. The initiator deasserts SEL and may then change the data signals.

Information transfer phases: allow transfer of information across the bus. There are several different types of information transfer phase, and the type is determined by MSG, C/D and I/O. Table 1 shows the information transfer phases:

SIGNALS				DIRECTION OF
MSG	C/D	I/O	PHASE NAME	INFORMATION TRANSFER
1	1	1	data out phase	initiator to target
1	1	0	data in phase	target to initiator
1	0	1	command phase	initiator to target
1	0	0	status phase	target to initiator
0	0	1	message out phase	initiator to target (not used)
0	0	0	message in phase	target to initiator

All signals active-low: 0=assertion
1=deassertion

Table 1 Information transfer phases

The information transfer phases use the REQ/ACK handshake to control information transfer: each REQ/ACK allows the transfer of 1 byte. The handshake sequence is:

1- target asserts REQ to request data transfer
2- initiator asserts ACK when data is valid on bus
3- target deasserts REQ when data has been transferred
4- initiator deasserts ACK ready for next handshake

Prior to and during information transfer, the I/O signal determines the direction of the transfer as can be seen in Table 1.

Before each information transfer phase the target will set up the MSG, C/D and I/O lines in such a way that these control signals are stable for 450ns before the REQ of the first handshake, and remain valid until the deassertion of ACK at the end of the last handshake.

During each information transfer phase the BSY line remains asserted and SEL deasserted.

Each information transfer phase is as follows:

Command phase: allows the initiator to direct the subsequent action of the target by transferring command bytes. The target asserts C/D and deasserts MSG and I/O.

Status phase: allows the initiator to read the target's status information. The target asserts C/D and I/O and deasserts MSG.

Data out phase: allows data to be transferred from initiator to target. The target deasserts MSG, C/D and I/O.

Data in phase: allows data to be transferred from target to initiator. The target asserts I/O and deasserts MSG and C/D.

Message out phase: not used by the system - available for future expansion.

Message in phase: allows the target to send a message byte to notify completion of a command.

5.1.4 The reset condition

The reset condition is caused by the assertion of RST, and immediately clears the bus and resets the system. Regardless of the prior bus phase, the bus resets to the bus free phase. The Winchester controller reads the drive's parameters off the disc.

Reset can occur at any time and takes precedence over all other phases and conditions. In practice it occurs on power-up or when the BREAK key is pressed.

5.1.5 The ST-412 disc interface connector pinouts (J2 and JO)

The disc controller board communicates with the Winchester disc via two connectors: J2 carries control information, and J0 carries data. J1 is not used in this implementation, but is electrically identical to J0.

```
J2 Pin no
0V   1    2 READ/WRITE CURRENT HEAD 2^3
0V   3    4 HEAD SELECT 2^2
0V   5    6 WRITE GATE
0V   7    8 SEEK COMPLETE 0V 9 10 TRACK 0
0V  11   12 WRITE FAULT
0V  13   14 HEAD SELECT 2^0 0V 15 16 RESERVED
0V  17   18 HEAD SELECT 2^1 0V 19 20 INDEX
0V  21   22 READY
0V  23   24 STEP
0V  25   26 DRIVE SELECT 1
0V  27   28 DRIVE SELECT 2
0V  29   30 DRIVE SELECT 3
0V  31   32 DRIVE SELECT 4
0V  33   34 DIRECTION IN
```

```
J0 Pin no
DRIVE SELECTED    1   2 0V
      RESERVED    3   4 0V
      RESERVED    5   6 0V
      RESERVED    7   8 0V
      RESERVED    9   10 RESERVED
            0V   11   12 0V
+MFM WRITE DATA  13   14 -MFM WRITE DATA
            0V   15   16 0V
+MFM READ DATA   17   18 -MFM READ DATA
            0V   19   20 0V
```

The read and write MFM data lines (pins 13 14 17 and 18 of J0) are differential signals.

5.2 The 1MHz expansion bus

The following is a description of the 1MHz expansion bus signals used by the Winchester Disc Host Adapter, and their function as applied to the Winchester Disc system. For a full description of the 1MHz expansion bus see "BBC Microcomputer Application Note Number 1 - 1MHz Bus", part number 0407,000, published by Acorn Computers Limited.

5.2.1 Control, address and data lines

1MHzE (system 1MHz, pin 4) is a continuously running 1MHz timing signal. During access to the 1MHz bus, the processor clock (normally 2MHz) is stretched so that the trailing edges of 1MHzE and the processor clock are synchronised.

R/NW (read/not-write, pin 2) is the system read/write line.

NIRQ (not-IRQ, pin 8) is the interrupt request line which is open collector and asserted by a device pulling it low. IRQ is level triggered active-low.

NRST (not-reset, pin 14) is output only active-low system reset line. It is active on power-up and when the BREAK key is pressed.

NPGFC (not-page &FC, pin 10) is a signal decoded from the top 8 system address lines (A8 to A15). NPGFC is an active-low signal which is low when the address high byte is &FC, ie when the full address is &FC00 to &FCFF. Four locations in this range are used by the Winchester system: &FC40 to &FC43 inclusive, see 7.2.

A0 to A7 (address low, pins 27 to 34) are the bottom 8 system address lines.

D0 to D7 (system data bus) are the bi-directional data lines. Direction determined by R/NW. The data lines are buffered, and the buffer enabled only when NPGFC is active.

Pins 1 3 5 7 9 11 13 15 17 and 26 are 0V. **5.2.**
2 Connector pinout

TOP	Pin No		BOTTOM
0V	1	2	R/NW
0V	3	4	1MHzE
0V	5	6	For other applications
0V	7	8	NIRQ
0V	9	10	NPGFC
0V	11	12	For other applications
0V	13	14	NRST
0V	15	16	For other applications
0V	17	18	D0
D1	19	20	D2
D3	21	22	D4
D5	23	24	D6
D7	25	26	0V
A0	27	28	A1
A2	29	30	A3
A4	31	32	A5
A6	33	34	A7

5.3 Winchester Disc Host Adapter

In conjunction with the following description, reference should be made to the Winchester Disc Host Adapter circuit diagram in the Appendix.

The Winchester Disc Host Adapter is an interface between the SASI/SCSI interface and the 1MHz expansion bus. It consists of address decoding and handshake control, buffering of the signals in either direction, and termination.

5.3.1 Address decoding and handshaking

The Host Adapter decodes 4 locations in the host microcomputer's page FC I/O space. These four locations are as follows:

Address	Read	Write
&FC4O	data	data (direction determined by R/NW)
&FC41	status	---
&FC42	select	
&FC43	enable IRQ	

Page FC is decoded in the host microcomputer and this is available to the Host Adapter as NPGFC (not-page FC). NPGFC is synchronised with 1MHzE by the de-glitch circuit (half of IC10) and the clean signal is labelled CNPGFC (pin 5, IC10).

The low order address lines A0 to A7 are buffered through IC5.

IC6, a 3 to 8 line decoder with three enable inputs, decodes the low order addresses &4O to &43, ie output pin 15 goes low when the low order address is &40, &41, &42 or &43.

IC7 is another 3 to 8 line decoder which takes the output from IC6 and CNPGFC and 1MHzE as enable inputs. The 2 least significant address bits A0 and Al are decoded along with R/NW into the required 5 separate signals shown above.

Y0 (pin 15) is read data (R/NW = 1)
Y4 (pin 11) is write data (R/NW = 0)
Y1 (pin 14) is status
Y6 (pin 9) is select
Y7 (pin 7) is enable IRQ

All these outputs are active-low.

When either of the two data transfer paths is selected (Y0 or Y4) an ACK signal is generated by clocking a D-type flip-flop (half of IC11). This flip-flop is cleared direct from the REQ line, and thus the REQ/ACK handshake is facilitated.

The other half of IC11 facilitates the SEL/BSY handshake. The D-type is clocked by Y6 to generate select and is cleared by BSY.

When Y7 is selected, the least significant bit on the data bus (D0) is clocked into a D-type flip-flop (half of IC10). If this value is a 1 then the latch (2 NANDs of IC12) is enabled and an IRQ will be generated at the next falling edge of REQ. To disable interrupts Y7 is
selected with a 0 on D0. IRQs are enabled only for a very short time (around 10ms) when ensuring a sequential file buffer.

5.3.2 Buffering

The data bus (D0 to D7 of host microcomputer, DB0 to DB7 of SCSI interface) is buffered in the write direction by an octal 3-state buffer IC1 and an octal transparent latch (IC2). IC2 is enabled by Y4 of IC7 which is the write data signal, see 5.3.1. Because IC2 is a transparent latch, data will remain valid on the output side when the enable is deasserted. The outputs from IC2 are gated through 8 open collector NAND buffers which are enabled from the I/O control line of the SCSI interface and which invert the bus signals. To write data across the Host Adapter requires that both R/NW = 0 and I/O = 1.

The data bus is buffered and inverted in the read direction by an octal 3-state inverting buffer which is enabled by Y0 of IC7 which is the read data signal, see 5.3.1.

The control signals used by the SCSI interface are available for reading by the host microcomputer. They can be latched into IC4, an octal transparent latch, when it is enabled by Y1 of IC7. The control signals appear on the data bus in the following positions:

D0 MSG
D1 BSY
D2 0
D3 0
D4 NIRQ (see 5.3.1)
D5 REQ
D6 I/O
D7 C/D

All these control signals are inverted either by IC15 or IC9 prior to being latched, so all values read from the data bus are active high.

5.3.3 Termination

The Host Adapter PCB carries 4 resistor packs, RP1 to RP4, which are used for terminating the various buses and control lines.

RP1 terminates the SCSI lines from the disc controller board.

RP2, RP3, and RP4 terminate the 1MHz bus lines and are fitted if the Winchester is the only peripheral on the 1MHz bus or if it is the last peripheral in a daisy-chain.

6 Test equipment and formatting

Test Equipment Required:

BBC Microcomputer model BD ("host microcomputer"), fitted with ADFS ROM.
Video Monitor
Floppy Disc Drive (see below)
Winchester Disc unit Under Test

6.2 Formatting Drives

Before shipment, each Winchester Disc unit has a suite of utility programs stored on it, including a formatter entitled "Superform". Copies of this software are available to dealers on floppy disc.

For details on formatting, see the Winchester Disc User Guide, Acorn Part No. 0427,000.

Not explained in the User Guide are options B and C. Affixed to the drive itself is a label or labels bearing the defect list and other parameters particular to that drive.

Option B is used to input the defect list from the label in head, cylinder, byte format.
Option C is for entering the drive's parameters such as number of heads, cylinders, etc.

These options would be used for formatting a new drive or re-formatting a drive which lacks a readable parameter or defect list for any reason.

When Superform is run, it tries to read the defect list and parameter list from the drive and, if successful, it automatically formats the drive using this information. Built into Superform is a set of default values for drive parameters which can be inspected using
option C. If the drive concerned differs in any respect, the parameters must be typed in again. Two common classes of difference are:

1 On a 10M drive, RWCC could be 306 or 128.
2 On a 30M drive, the parameters for heads, cylinders and RWCC will differ

All data stored on the Winchester Disc, including the utility programs, are lost after formatting.

7 Fault finding

When the Winchester Disc unit is powered-up, the hard disc will spin up to speed in about 10 seconds. This process produces a rising pitch humming noise which means that the hard disc is spinning. Note that there is also a noise from the cooling fan, but this noise is lower in pitch and does not take time to build up. If the disc is not spinning then disassemble the unit and check the power supply and connections.

Make sure that the ADFS ROM is plugged into one of the test BBC Microcomputer's sideways ROM sockets. If the machine will not access the Winchester then type

```
*ADFS
```

If the unit powers up correctly but still won't work then print out the contents of the status register as follows:

```
PRINT ~?&FC41
```

The result should be zero. If the result is FF then the ribbon cable is disconnected.

7.1 Power supply

The three major components of the Winchester Disc unit - the disc drive, the disc controller board, and the Host Adapter board - are each powered from the switch-mode power supply unit which sits at the back left of the case. The power supply output cables are colour coded as follows:

black	ground
red	+5V
yellow	+12V

The power supply can be tested by measuring the +5 voltage between the black and red cables, and the +12 voltage between the black and yellow cables. The allowable voltage ranges are as follows:

+5V (black and red)	4.9V to 5.2V
+12V (black and yellow)	11.4V to 12.6V

These measurements should be made with all connectors in place.

Next measure the current drawn by each of the three components specified above from the +5V and +12V supplies. Two of the components are each supplied via a four-way plug-in connector, and the current measurement should be made in series with either the red cable (+5V) or the yellow cable (+12V). The connections to the meter to do this must be made with the power switch off. The measurements must be made after power-up as some of the circuitry, when working correctly, will alter its current consumption with time as shown below. The current drawn by each component from each voltage rail should be as follows:

Winchester hard disc unit, see figure 2:
+5V around 1 to 1.5A
+12V up to 4.5A on power-on falling to around 2A when up to speed

Disc controller board, see figure 2:
+5V around 1.5A
+12V around 250mA

Host Adapter board, see figure 2:
+5V around 500mA
+12V zero (not used)

The above figures are approximate and will enable checks to be made for open/short circuits and malfunctioning components.

7.2 Address decoding

The easiest way to test the address decoding is to execute a program which accesses the relevant memory location.

7.2.1 &FC40 read data

Run the following program:

```
10DIM P% 10
20[
30.a
40LDA &FC40
50JMP a
60]
70CALL a
```

Test pin 1 IC3 with a scope and check that the waveform is not stuck either high or low. It should look like the one shown in figure 4.

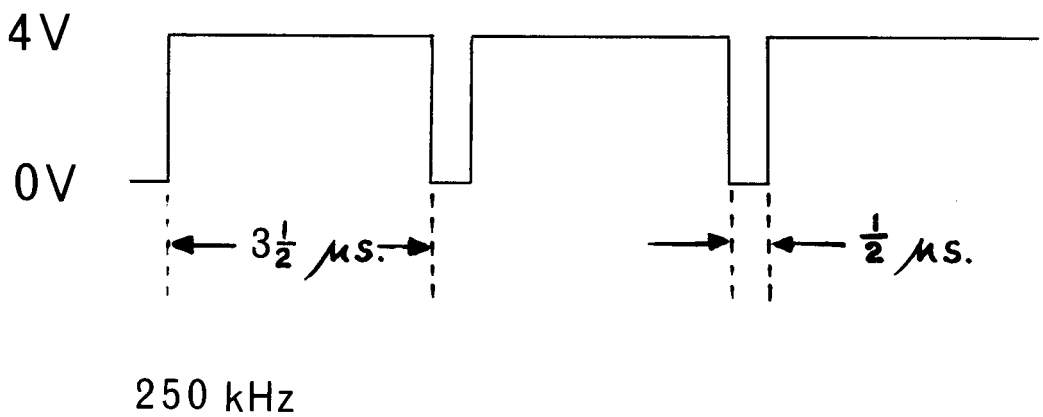

Figure 4 Test waveform

7.2.2 &FC40 write data

Run the following program:

```
10DIM P% 10
20[
30.a
40STA &FC40
50JMP a
60]
70CALL a
```

Test pin 11 IC2 with a scope and check that the waveform is not stuck either high or low. It should look like the one shown in figure 5.

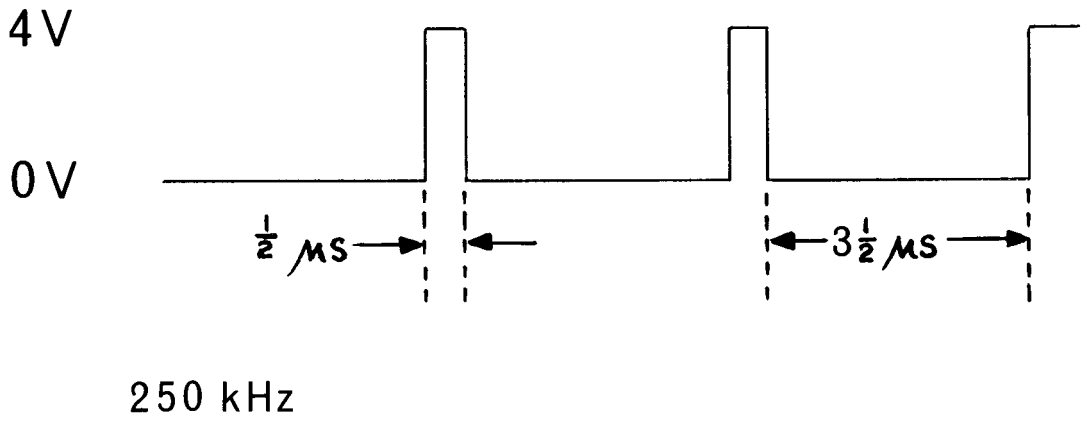

Figure 5 Test waveform

7.2.3 &FC41 read status

Run the following program:

```
10DIM P% 10
20[
30.a
40LDA &FC41
50JMP a
60]
70CALL a
```

Test pin 1 IC4 with a scope and check that the waveform is not stuck either high or low. It should look like the one shown in figure 4.

7.2.4 &FC42 write select

Run the following program:

```
10DIM P% 10
20(
30.a
40STA &FC42
50JMP a
60]
70CALL a
```

Test pin 11 IC11 with a scope and check that the waveform is not stuck either high or low. It should look like the one shown in figure 4.

7.2.5 &FC43 write IRQ enable

Run the following program:

```
10DIM P% 10
201
30.a
40LDA# 0
50.b
60STA &FC43
70JMP b
80]
90CALL a
```

Test pin 11 IC10 with a scope and check that the waveform is not stuck either high or low. It should look like the one shown in figure 4.

Pin 9 IC10 should be logic 0.

Now run the following program:

```
10DIM P% 10
20[
30.a
40LDA# 1
50.b
60STA &FC43
70JMP b
80]
90CALL a
```

and pin 9 IC10 should now be logic 1.

7.3 Handshaking

To test the SEL/BSY handshake use the following program:

```
 10DIM P% 20
 20[
 30.a
 40LDA# 1
 50STA &FC40
 60STA &FC42
 70.b
 80LDA &FC41
 90BEQ b
100RTS
110]
120PRINT ~USR(a) AND &FF
```

Press the BREAK key followed by OLD and RUN the program. The LED on the disc controller board should illuminate, and the result 2 should be printed on the screen after the assembler listing. (The result is the contents of the status register, and BSY is bit Dl which corresponds to 2.)

If nothing happens and the program is typed in correctly then there is either a loose connection or a fault in the disc controller board.

The system can be deselected by pressing BREAK.

The REQ/ACK handshake operates only during data transfer. If the hardware for this handshake is faulty then there can be no data transfer.

7.4 Bus lines

When the buses are not being asserted either by the SCSI interface or the host microcomputer, ie in the bus free phase, all bus lines will float according to the values of their terminating resistors.

Measure the voltage of each bus line in turn and make sure that none of them is stuck at +5V, which would indicate a short circuit, or at 0V which would indicate either that one of the buffers was enabled or that there was a short circuit. The correct voltages are as follows:

1 MHz expansion bus D0 to D7 and A0 to A7 should all be 2.5V.

SCSI DB0 to DB7 should all be 3V.

If, for example, D0 to D7 are all 0V or a mixture of 0V and 2.5V then one of the buffers is probably enabled.

APPENDIX

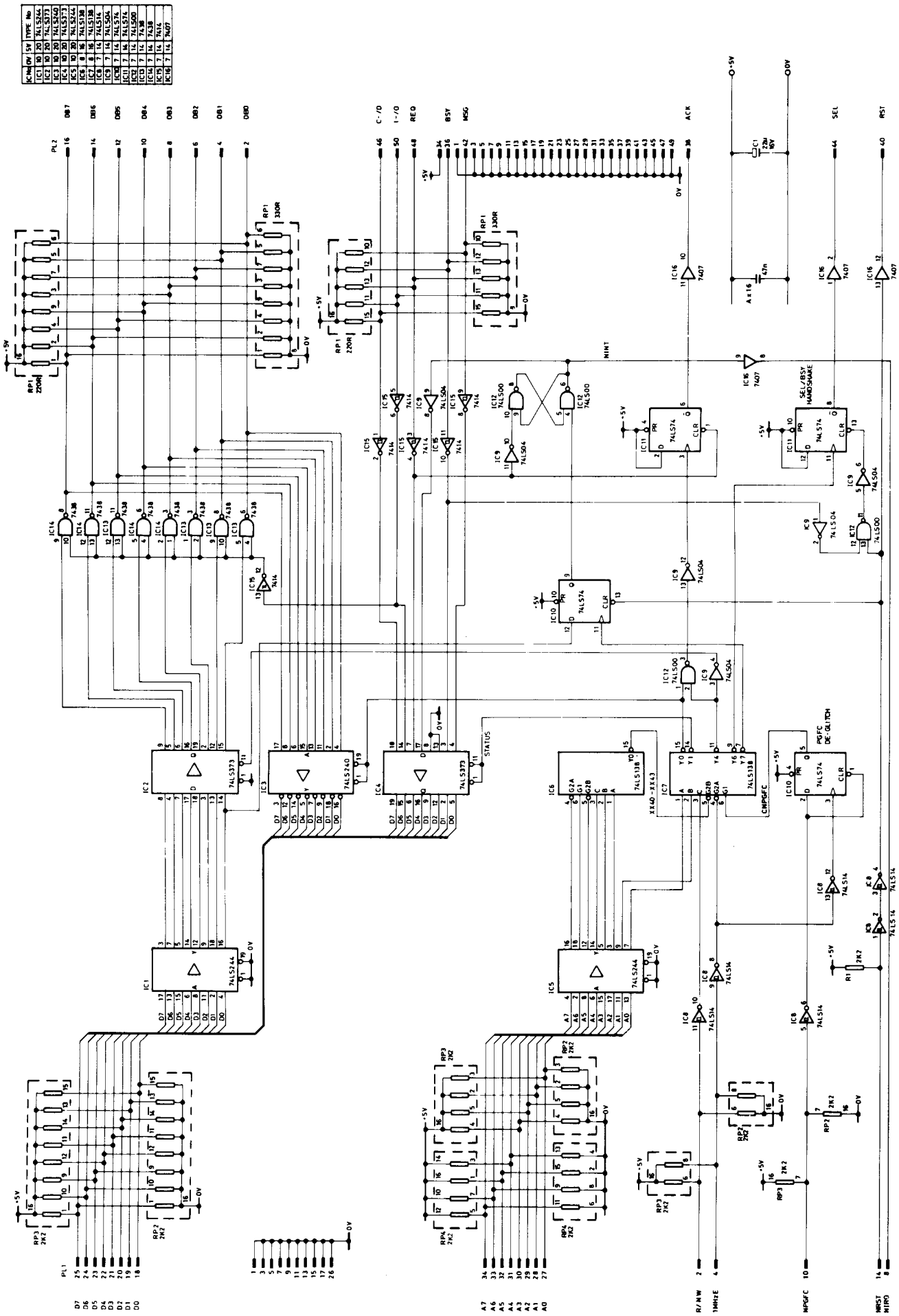

Host Adapter PCB circuit diagram

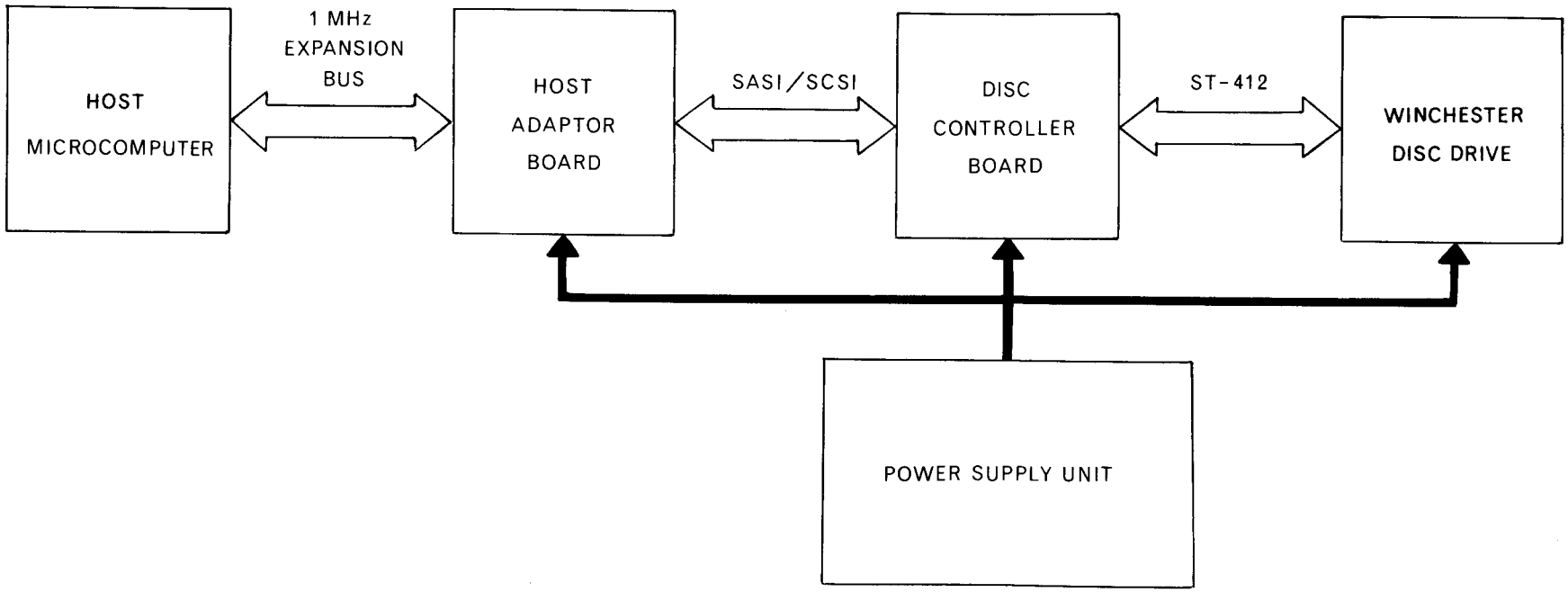
HOST
MICROCOMPUTER
1 MHz
EXPANSION
BUS
HOST
ADAPTOR
BOARD
SASI/SCSI
DISC
CONTROLLER
BOARD
ST-412
WINCHESTER
DISC DRIVE
POWER SUPPLY UNIT

Winchester Disc Unit parts list -SEE PAGE 29

Item	Part No	Description	Qty	Remarks
1	*0201,580	case (base)	1	
2	*0201,581	case (top)	1	
3	*0201,582	case (rear)	1	
4	*0201,583	110 front panel screened	1	10M version
	*0201,524	130 front panel screened	1	30M version
5				
6	0830,053	disc drive	1	10M version
	~0831.107	disc drive	1	30M version
7	~0831,102	power supply	1	
8	~0837,000	PCB (controller)	1	
9	0127,000	PCB (host adapter)	1	
10				
11	0890,010	adhesive silicone rubber	a/r	
12	*0884,054	PCB support spacer	4	
13	*0884,053	PCB support spacer	4	
14	*0882,121	screws M3x6 pan hd posi	8	for PCB spacers
15	*0884,140	screws 6-32 uncx3/8 pan hd	4	for disc drive
16	*0884,160	washers 6-32 UNC	4	for disc drive
17	*0882,974	washers M4	8	for fan and earth
18	*0882,124	screws M3x12 pan hd posi	4	for psu mounting
19	*0201,587	rear label	1	
20	*0201,586	front label	1	
21	*0882,223	screws M3x10 csk hd posi	2	for power socket
22	*0890,000	rubber feet	4	
23	*0805,003	switch dpst 250V 10A	1	
24	*0882,121	screws M3x6 pan hd posi	13	for case assy
25	*0815,902	power socket	1	
26	*0800,983	conr skt jk kit	2	
27	*0882,972	washers M3	35	
28	*0882,902	nuts M3	2	for power socket and 37-way conns
29	*0815,222	fuse 3A15 F HBC 20x5mmD	2	for item 25
30	*0880,072	cable clamp	2	
31	*0201,921	fan	1	
32	*0882,144	screws M4x12 pan hd posi	4	for fan
33				
34	*0882,904	nuts M4	6	for fan and earth
35	*0885,201	fan finger guard	1	
36	*0779,006	stackable LED	1	
37	*0779,005	grmt	1	for item 36
38	*0201,700	cable assy	1	live jumper
39	*0201,701	cable assy	1	live jumper
40	*0201,702	cable assy	1	neutral jumper
41	*0201,703	cable assy	1	safety earth
42	*0201,704	cable assy	1	disc drive earth
43	*0880,101	cable tie 197mm	6	
44	*0201,706	cable assy	1	drive data
45	*0201,707	cable assy	1	drive control
46	*0201,732	cable assy	1	ha to controller
47				
48	*0201,734	cable assy	1	ha to 1MHz bus
49	*0201,877	cable assy	1	LED to Winchester

Parts marked * are available as spares;
parts marked ~ can be obtained for dealers by their supplier.
Contact supplier for details.

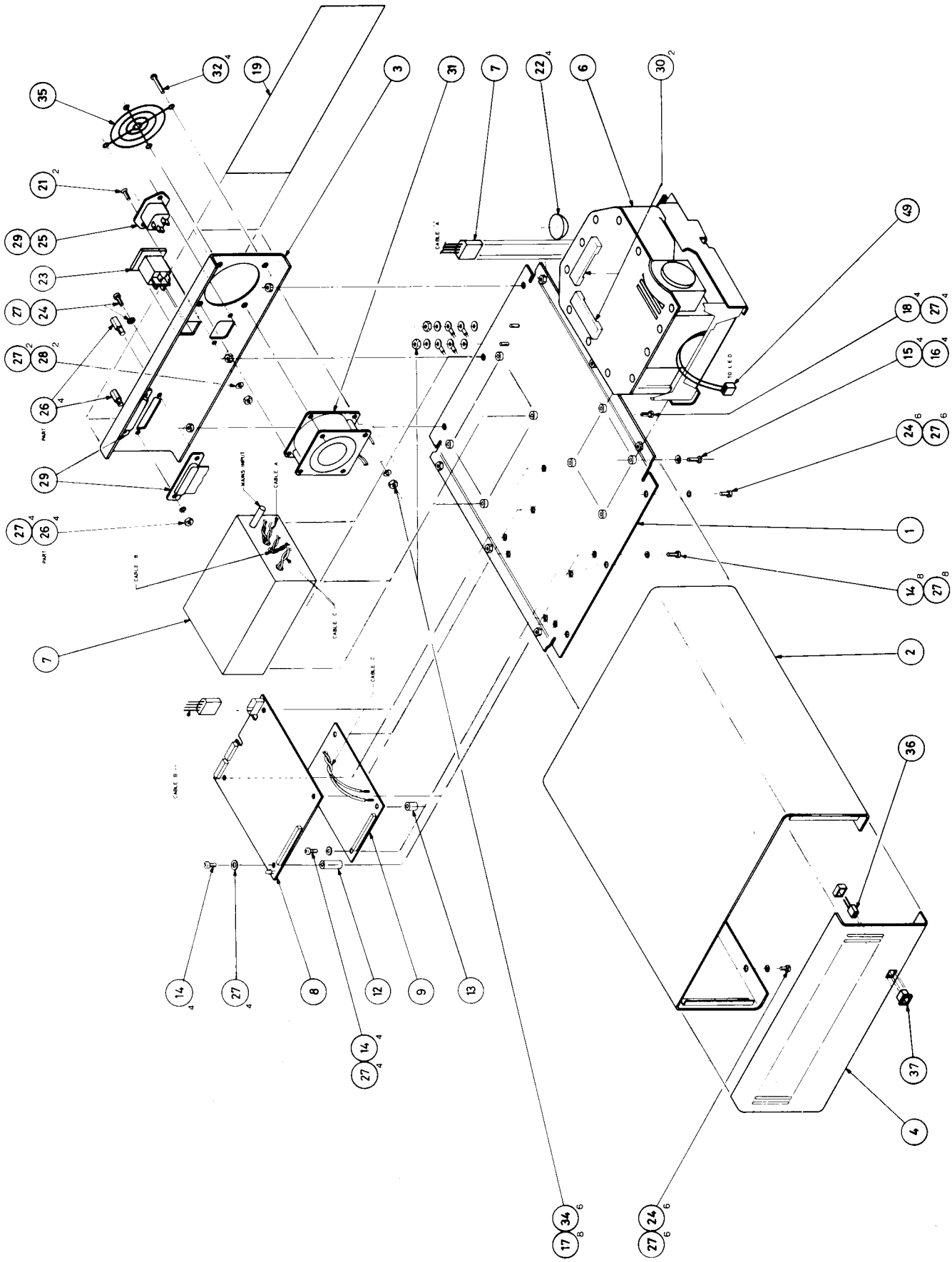

Winchester Disc unit assembly diagram

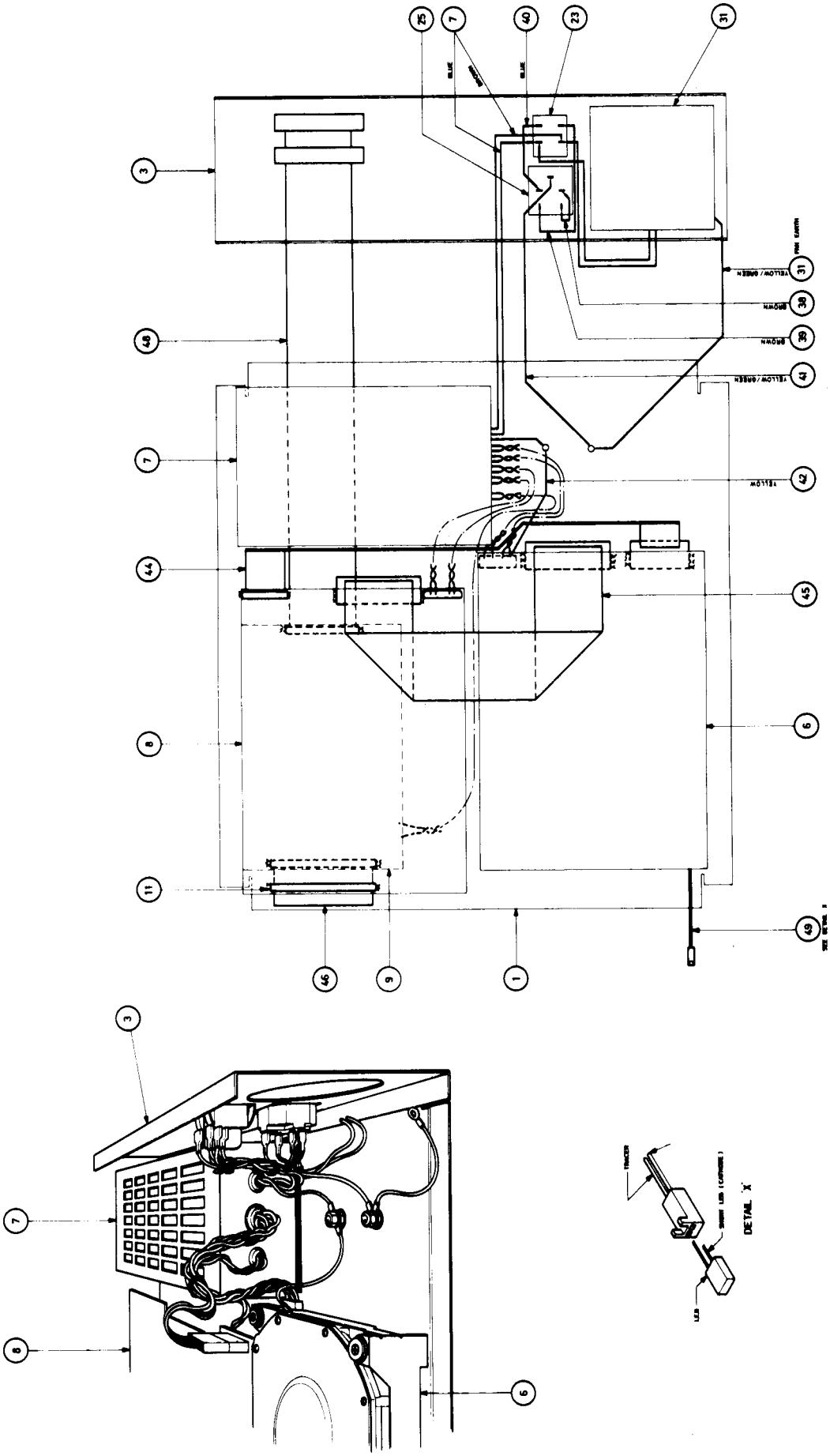

Winchester Disc unit wiring diagram

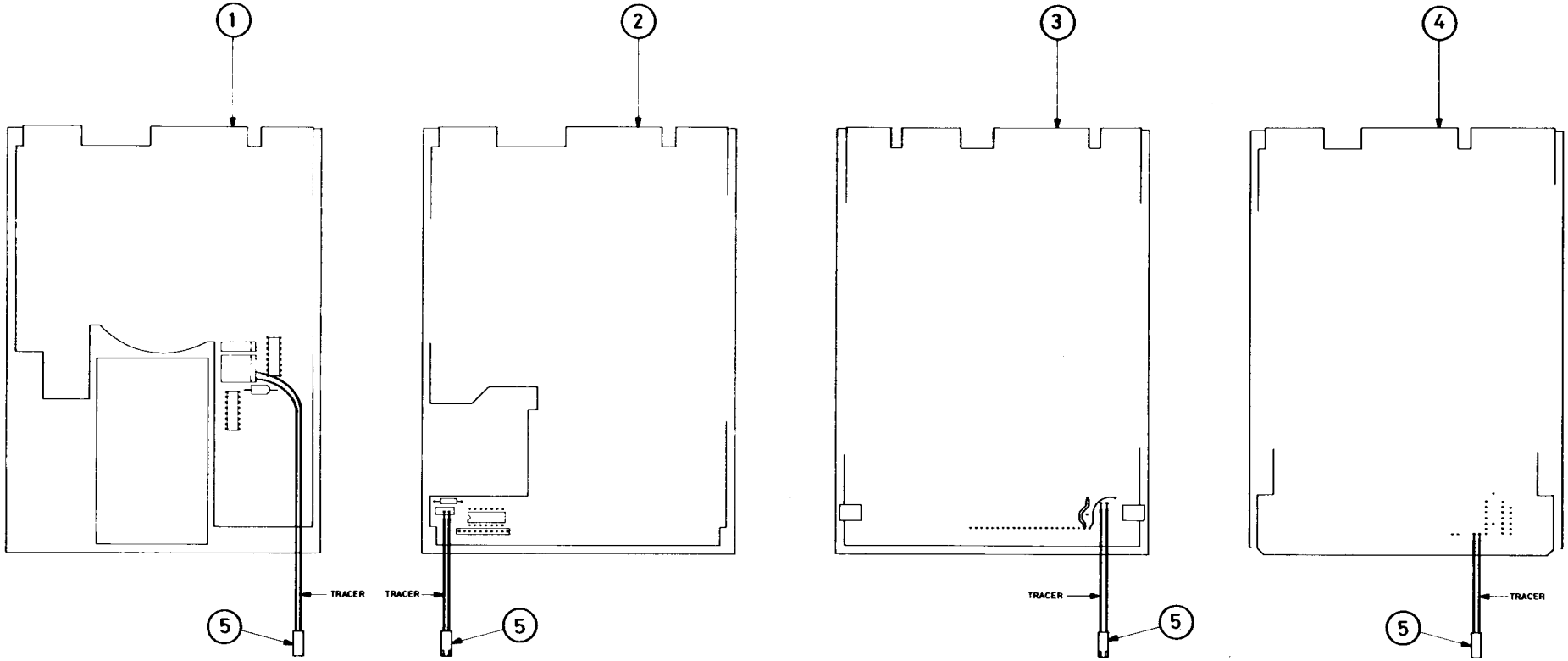

EXAMPLES SHOW LED WIRING OPTIONS FOR ALTERNATIVE DISC DRIVES

ITEM	DESCRIPTION	REMARKS
1	DISC DRIVE,10MB	SEAGATE
2	DISC DRIVE,10MB	MICROSCIENCE
3	DISC DRIVE,30MB	MICROPOLIS
4	DISC DRIVE,30MB	RODIME

Winchester Disc Host Adapter parts list -SEE PAGE 35

Item	Part No	Description	Qty	Remarks
1	bare PCB	1		
2				
3				
4	0502,222	resistor 2k2 .25W +/- 5%	1	R1
5	*0572,221	resistor pack 16 pin DIL 220R/330R	1	RP1
6	*0573,222	resistor pack 16 pin DIL 2k2	2	RP2,RP3
7	*0571,222	resistor pack 16 pin DIL 2k2	1	RP4
8	*0800,116	IC socket 16 pin	3	RP2,3,4
9				
10	0680,002	capacitor decoupler 47nF	16	A
11	0622,220	capacitor 22uF 16V	1	C2
12				
13				
14				
15	*0740,007	7407	1	IC16
16	*0740,014	7414	1	IC15
17	*0740,038	7438	2	1C13,1C14
18	*0742,000	74LS00	1	IC12
19	*0742,004	74LS04	1	IC9
20	*0742,014	74LS14	1	IC8
21	*0742,074	74LS74	2	IC10,IC11
22	*0742,138	74LS138	2	106,1C7
23	*0742,240	74LS240	1	IC3
24	*0742,244	74LS244	2	IC1,IC5
25	*0742,373	74LS373	2	1C2,1C4
26				
27				
28	*0800,870	connector 34 pin header	1	PL1
29	*0800,871	connector 50 pin header	1	PL2
30				
31				
32	*0800,784	right angle faston tab	2	0V,5V

Parts marked * are available as spares. Contact supplier for details.

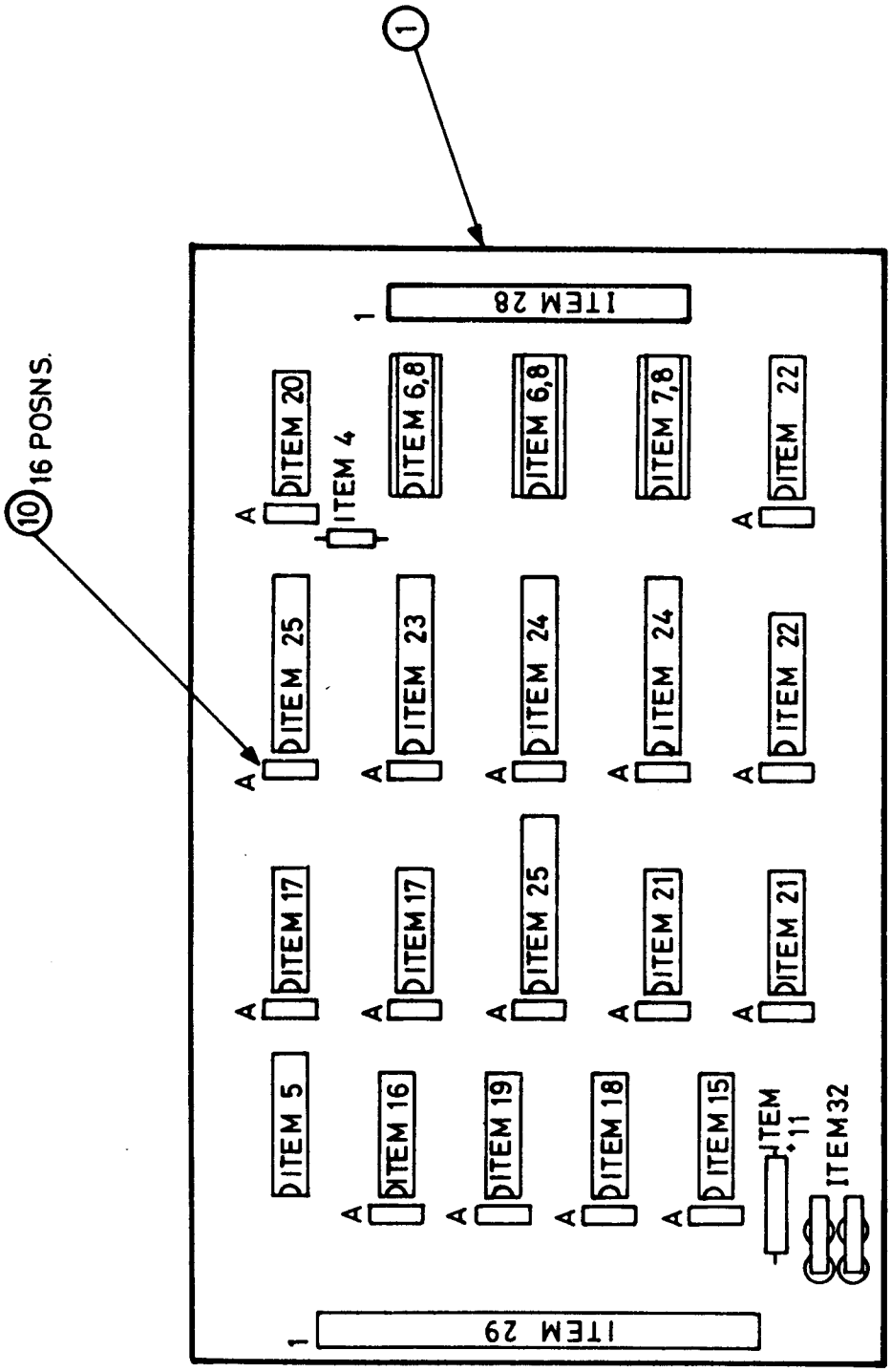

Host Adapter PCB assembly diagram

ACORN COMPUTER

Acorn Computers Limited, Fulbourn Road, Cherry Hinton, Cambridge CB1 4JN, England